# DATA SHEET

1/9/2012 Page 1 / 3

-

**Receiver**

Society
Reference
Address
Telephone
Fax
E-mail

**From**

**Item no.** 103022214

## Pump data :

Model :

FEKA 600 M-A

Pressure rating :

Min. fluid temperature : 0 °C

Max. fluid temperature : 35 °C

Max. Temperature operating : 40 °C

## Requested data :

| | |
|---|---|
| Flow | 0 m³/h |
| Head | 0 m |
| Fluid : | Water, pure |
| Fluid Temperature : | 20 °C |
| Density : | 998.3 kg/m³ |
| Kinematic viscosity | 1.005 mm²/s |
| Vapor pressure : | 100 kPa |

## Hydraulic data (duty piont)

Flow

Head

## Materials :

| | |
|---|---|
| Pump body | Technopolymer |
| Impeller | Technopolymer |
| OR ring | Rubber NBR |
| Motor top body | AISI 304 X5 Cr Ni 1810 UNI 6900/71 |
| Rotor shaft | AISI 416 X12 CrS 13 UNI 6900/71 |
| Seeger ring | 12E - UNI 7435 STAINLESS |
| Wearing disc (Only for NOVA) | Technopolymer |

**Curve tolerance according to ISO 9906**

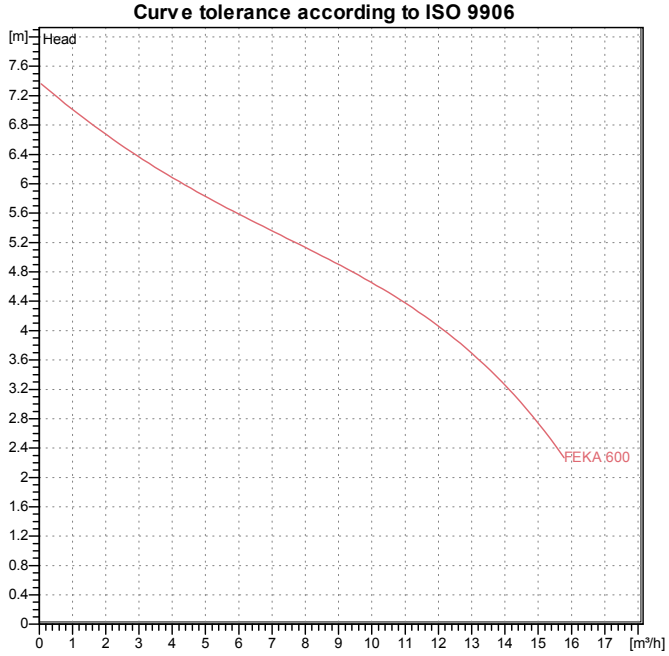


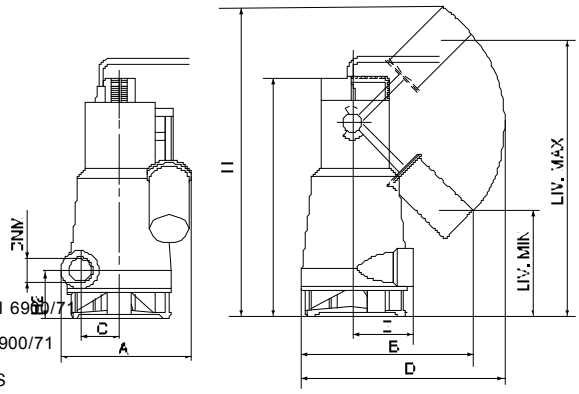


## Motor data :

| | |
|---|---|
| Trade mark : | DAB |
| Nominal power P2: | 0.55 kW |
| Rated speed: | 2850 1/min |
| Rated voltage : | 1~ 0 V 50 Hz |
| Nominal current : | 0 A |
| Degree of protection : | IP 68 |

**Weight :** 7 kg

**Dimension** mm

| | | | | | |
|---|---|---|---|---|---|
| A | 193 | H1 | 443 | | |
| B | 235 | H2 | 73 | | |
| C | 56 | LIV MAX | 390 | | |
| D | 296 | LIV MIN | 190 | | |
| DNM | 1"1/4 G | | | | |
| E | 90 | | | | |
| H | 368 | | | | |

**Pump connection**

Suction side /

Discharge side 1 " 1/4 G/ --

DAB PUMPS reserves the right to make modifications without notice

# PERFORMANCE CURVES

1/9/2012



-

| Receiver | From |
|---|---|
| Society<br>Reference<br>Address<br>Telephone<br>Fax<br>E-mail | |

**FEKA 600 M-A**

**Curve tolerance according to ISO 9906**

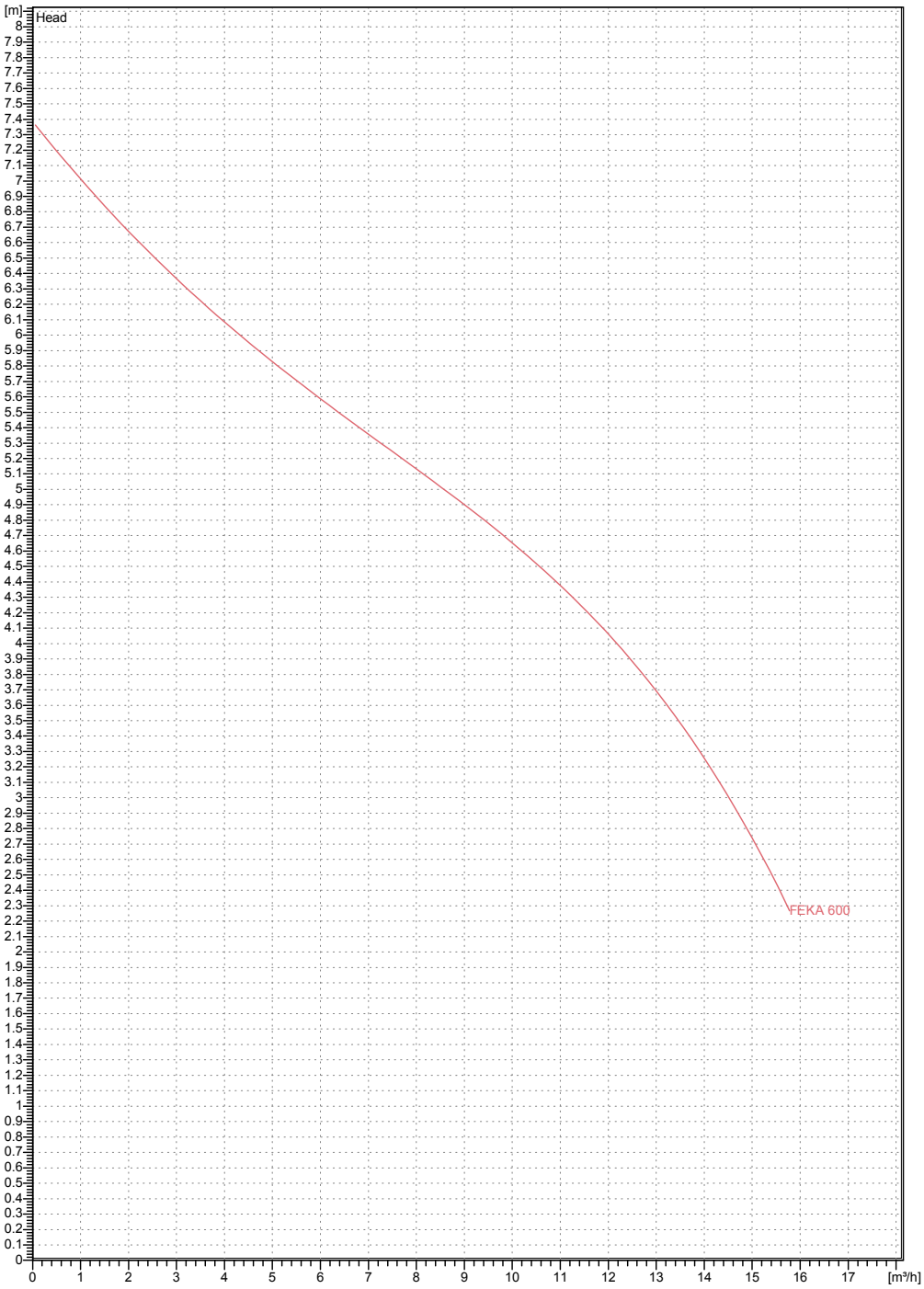


**Hydraulic data (duty piont)**

| Suction side | Discharge side | Flow | Head | Speed |
|---|---|---|---|---|
| / | 1 " 1/4/ G- | 0 m³/h | 0 m | 2850 1/min |

| Project | Project ID | Created by | Created on |
|---|---|---|---|
| | | | **1/9/2012** |

DAB PUMPS reserves the right to make modifications without notice

# DIMENSIONAL DRAWING

1/9/2012



-

| Receiver | From |
|---|---|
| Society<br>Reference<br>Address<br>Telephone<br>Fax<br>E-mail | |

## FEKA 600 M-A

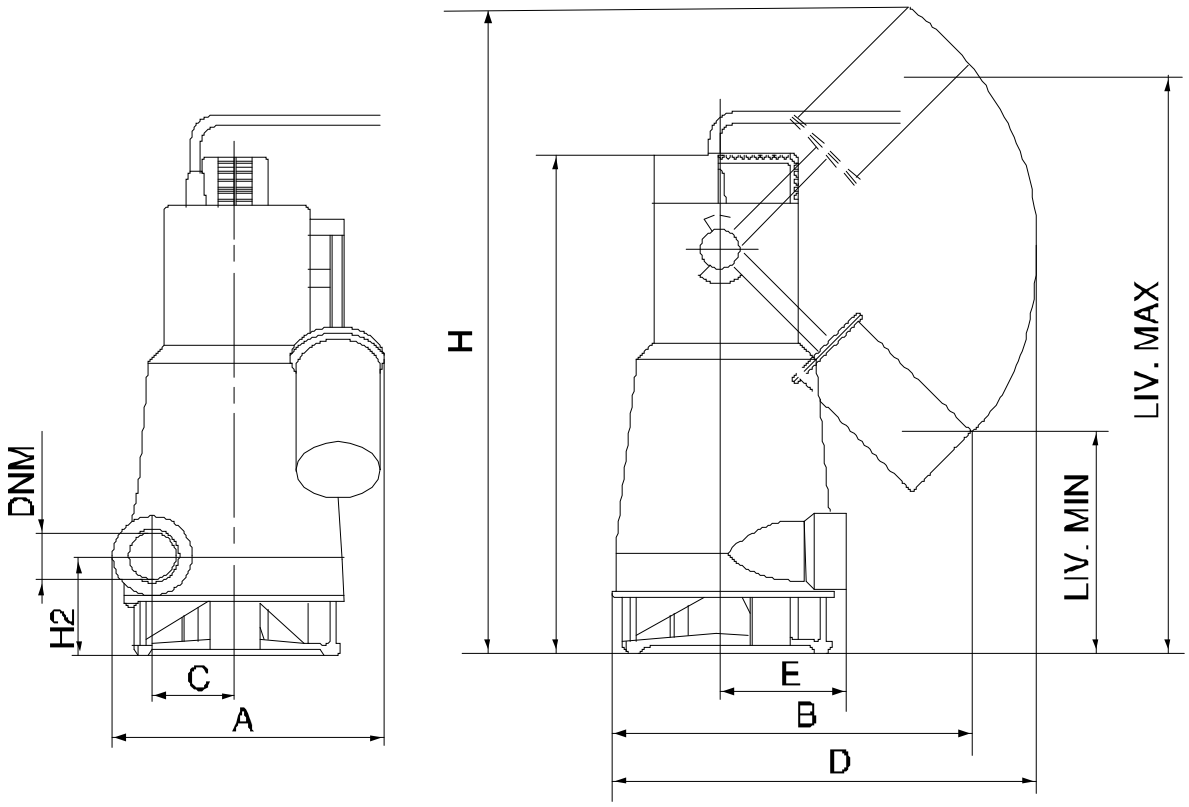


| Dimensions in mm | | | | | | | | | | | Pump connection |
|---|---|---|---|---|---|---|---|---|---|---|---|
| 1 | A | 193 | LIV MIN | 190 | | | | | | | |
| 2 | B | 235 | | | | | | | | | Suction |
| 3 | C | 56 | | | | | | | | | |
| 4 | D | 296 | | | | | | | | | |
| 5 | DNM | 1"1/4 G | | | | | | | | | |
| 6 | E | 90 | | | | | | | | | Discarge |
| 7 | H | 368 | | | | | | | | | 1 " 1/4 G |
| 8 | H1 | 443 | | | | | | | | | -- |
| 9 | H2 | 73 | | | | | | | | | |
| 10 | LIV MAX | 390 | | | | | | | | | |

| Project | Project ID | Created by | Created on |
|---|---|---|---|
| | | | **1/9/2012** |

DAB PUMPS reserves the right to make modifications without notice